International Journal of Signal Processing and Communication Engineering (IJSPCE) Vol 1, Issue 1, May 2016

Farmer Friendly Aerial Vehicle for Pest Control and Monitoring

[1] Sudarshan M R [2] Rakshita R M [3] Sanjay B M [4] Swathi G [5] Dr. Bindu A. Thomas
[1][2][3][4]Student [5] Professor and Head
[1][2][3][4][5] Department of ECE,
Vidya Vikas Institute of Engineering and Technology, Mysuru

***Abstract*— Farmers are facing many problems related to irrigation methods, pest control and harvesting methods. Pest control is one of such major problems faced by the farmers in areca farming. In conventional methods, pesticide is sprayed by a skilled laborer who climbs the areca trees which grow up to 60 feet. This is a risky job. Even though the qualities of pesticides are being improved, the problem of controlling pests is still unsolved. This is because of lack of efficient techniques used for spraying the pesticides. To solve this problem, use of remote controlled aerial vehicles is proposed. The main objective of this project is to help farmers by reducing labor, time and cost required for spraying pesticides to areca farms. Aerial vehicles with remote controlling capability can offer high degrees of flexibility during operation. Given its aerial abilities, the aerial quadcopter will be able to reduce the overall time required to spray pesticides to areca farms. It will also overcome the scarcity of laborers which in turn reduces cost. As the aerial vehicle operation can be controlled staying on the ground, the human risks involved in the conventional methods of spraying pesticides are eliminated. With the help of the camera, the farmer will also be able to monitor the growth and maintain the health of areca nuts.**

***Keywords*—pest control; Remote control; quad copter; Areca nut; Spraying Unit.**

I. INTRODUCTION

In agriculture, application of pesticides and fertilizers is a crucial process and is of prime importance for the growth of the crops. Agricultural research on the uses of unmanned aerial vehicles (UAVS) is becoming more visible throughout the world. They can be used to spray chemicals on an agricultural area, more effectively. Unmanned aerial vehicles have become cheaper as many control functions can be implemented in software rather than having to depend on expensive hardware. An aerial vehicle can do multiple tasks like spraying pesticides, remote monitoring and watering to some extent. With large weight lifting capacity, the uav will be able to carry the pesticide required for many number of trees.

Areca is one of the major crops grown in the malenadu region of Karnataka. In spite of favourable weather conditions, trees suffer from various diseases such as rot disease, Mahali disease, etc. This leads to reduction in the yield. To prevent the diseases, pesticides like copper sulphate solution are sprayed on to the areca nuts. Each areca tree consumes about one litre of pesticide and spraying is done usually in the month of may. A typical procedure is followed to spray pesticides as the height of the trees is a challenge.

In conventional practice, it takes skilled manpower to climb the trees and spray pesticides. A ground based manual pump or a hand-held spraying machine is used by the labourers. This involves high levels of human risk.
The purpose of the UAV is to help farmers in spraying pesticides to areca plantations easily and efficiently.

II. METHEDOLOGY

a. Hardware Description

This section includes Navigation Unit, Flight Control Board, Spraying Unit, RF Module, Power Supply and Distribution, Monitoring Unit and Frame.

1. Navigation Unit:

The components of navigation unit are selected based on the thrust calculations. The required thrust value is obtained by the total weight of the aerial vehicle. It includes components like brushless DC Motor, Electronic Speed Controller, and Propeller. The total weight of the aerial vehicle is 4 kg which includes the weight of all components. Then the required thrust will be twice the total weight that is

8 kg. By considering this rule, the motors each having a thrust of 2.2kg and a KV rating of 1200 are selected. The Electronic Speed Controller (ESC) is an electronic circuit that is used to vary the speed of electric motors; to control the direction of rotation of the motors and possibly also to act as a dynamic brake. The propeller is a type of fan that converts electrical power to rotational motion to provide the thrust required to lift the vehicle. The aerial vehicle uses two clockwise and two counter-clockwise rotating propellers. Propellers are classified by length and pitch. Generally, increased propeller pitch and length will draw more current from the battery. This reduces the overall flight time. Higher pitch gives slower rotation, but will increase the vehicle's speed. Hence, considering this, propeller with low pitch numbers is chosen which can generate more torque so that the motors do not need to work hard to rotate the propeller. This results in reduced current consumption.

2. Flight Controller Board:

This module is the heart of the aerial vehicle as it drives the motors by generating PWM (Pulse Width Modulation) signals, based on the control inputs. This module consists of a wireless receiver (typically a radio receiver), microcontroller and a 3-Axis Gyro/Accelerometer. MSP430 is a mixed-signal microcontroller family from Texas Instruments which is built around a 16-bit CPU. MSP430 is designed for low cost and low power consumption embedded applications. The MSP-EXP430G2 LaunchPad is an inexpensive and simple evaluation kit and it is used as flight controller board in the aerial vehicle. MSP430 has several digital I/O channels, PWM channels, communication channels etc. Two PWM channels are used to drive the motors through ESCs. The controller receives user inputs or commands via a Radio Frequency (RF) module and processes them to generate the required PWM signals for motors and digital signals for the operation of DC motor pump in the spraying unit.

MPU6050 is a little piece of motion processing tech which is used as an important part in the flight controller board. This helps in the stability of the aerial vehicle during flight. By combining a MEMS 3-axis gyroscope and a 3-axis accelerometer on the same silicon die together with an onboard Digital Motion Processor, it is capable of processing complex 9-axis Motion Fusion algorithms. The MPU6050 does away with the cross-axis alignment problems that can creep up on discrete parts.

3. Spraying Unit:

This unit consists of a pesticide container, a spray hose, a DC motor pump and a motor driver circuit. A digital output channel is used to turn the pump on/off in accordance with the input from the user. The spraying unit is attached to the bottom of the aerial vehicle.

4. RF Module:

The AIR BoosterPack is a low-power wireless transceiver extension module for use with the Texas Instruments MSP-EXP430G2 LaunchPad development kit. Control signals are transmitted to the aerial vehicle through the radio channels.

5. Power Supply and Distribution:

This module comprises of a Lithium Polymer battery (11.1V), a 12 volt battery and a Power Distribution Board. Based on the desired flight time of the aerial vehicle, the required parameters of the battery such as capacity, voltage rating, discharge rate etc. are decided.

Lithium-Polymer (LiPo) battery is a rechargeable battery made of lithium-ion technology in a pouch format. A LiPo battery of capacity 5500mAh is used to run the motors. Battery with higher capacity is used to power the motors so as to keep the UAV floating in the air for a longer duration. The discharge rate of the battery is selected based on the total current drained from the battery. A 12 volt battery is needed for the operation of spraying unit.

A Power Distribution Board is mounted on the UAV to distribute the power to all the peripherals including camera and sensors.

6. Monitoring Unit:

This unit consists of a camera. It plays an important role in applications such as monitoring. The image data acquired by the camera is fed into a monitor display. The images can also be processed further to extract specific details. In order to capture best images in spite of the rapid movement of the UAV, highly stabilized camera is used.

7. Frame:

Frame is selected based on the areas of all the components and the length of the propellers. It provides housing for all the components, provides mechanical support and describes the shape of the aerial vehicle.

III. SOFTWARE DESCRIPTION

IAR embedded workbench is the software tool used to interface and run the program on msp430. The workbench provides an assembly programming platform. The radio communication related programming is done on a c-programming platform named energy.

a. Implementation

This section gives a detailed explanation on the usage of hardware and software in implementing the proposed design. The size and weight of the aerial vehicle are the major considerations in the implementation process. An efficient and feasible programming is necessary for the operation of the aerial vehicle.

b. Hardware implementation

Frame is the supporting structure of the aerial vehicle. It provides space for the placement of all the components. The dimensions of the frame defines the overall size of the aerial vehicle. Once the frame is setup, the brushless dc motors are placed at the corners of it. The propellers are fixed to the shaft of each motor. The rotation of these propellers are responsible for the navigation of the aerial vehicle. The motors derive power from the battery through the electronic speed controllers (esc). The flight control board consists of a radio receiver to receive signals from the remote control, a gyro sensor to stabilize the aerial vehicle and a microcontroller to generate appropriate pwm signals. The spraying unit is placed at the bottom of the aerial vehicle.

C. Block diagram

The block diagram as shown in the figure 1, explains the components grouped under different modules. the operation of the aerial vehicle is controlled manually by the user through a remote control. it uses radio frequency for the transmission of control signals. the radio receiver along with the gyro sensor and msp430 microcontroller makes a flight control board. the gyro sensor senses any change in the orientation of the aerial vehicle thus helping in the stability.

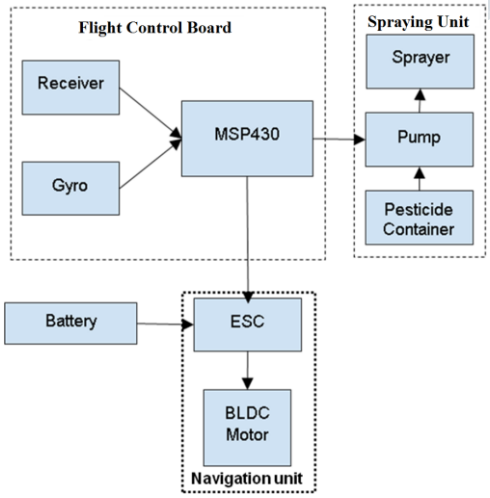

Figure 1: block diagram

The msp430 sends PWM Signals to the ESCS based on the inputs given by the gyro sensor and the user. The esc feeds the motors with appropriate power in accordance with the width of the PWM signals received. The rotation of the propellers provides enough thrust for the lift and navigation of the aerial vehicle. The operation of the spraying unit is also controlled by the msp430 through a motor driver circuit.

IV. SOFTWARE IMPLEMENTATION

The program for implementing the proposed idea will have two segments; one for generating PWM signals to control the speed of the motors, one for controlling the operation of spraying unit. The properties of the PWM signal generated by the MSP430 depend on the inputs given by the user and the gyro sensor. The switching of the pesticide pumping motor is controlled by the MSP430 based on the commands given by the user through remote control.

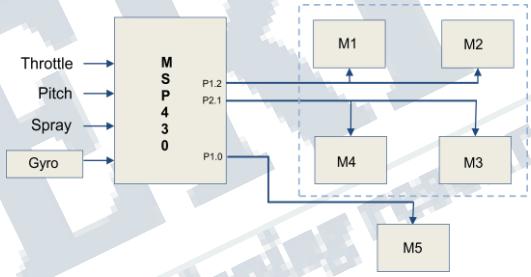

Figure 2: Flight Control Board

The flight controller board is as shown in the figure 2. The control signals given to the MSP 430 are throttle, pitch and spray. The RF module, which is required for the remote control, is programmed so as to transmit the user inputs to the MSP 430.

V. RESULT ANALYSIS AND CONCLUSIONS

Result Analysis

There are many parameters to be considered for result analysis. Some of them are altitude reached, weight of the vehicle while carrying the pesticide and the amount of pesticide sprayed by aerial vehicle with respect to time. The standard height of an areca tree will be 50 – 60 feet.

1. ***Altitude coverage:***

For the given rating of the motors, the aerial vehicle will be able to reach a certain height. Using motors of more efficiency can scale up the altitude coverage, in turn reducing the time required to elevate.

2. ***Weight With Time Analysis***:

There is a trade-off between the weight and the maximum height reached by the aerial vehicle. Using a

lightweight but strong material for frame can relatively reduce the time required to reach greater altitudes.

3. Pesticide sprayed with time:

The amount of pesticide sprayed with respect to time depends on the efficiency of the motor pump and the rate of flow of pesticide. With high degrees of stabilization, the pesticide can be quickly sprayed thus avoiding wastage.

VI. CONCLUSION

The proposed system avoids human risks and reduces manpower. The system is cost effective which is a great motivation to use this product. With more features, the aerial vehicles can be employed as an effective replacement for the existing methods of spraying pesticides. By undergoing a basic training, the farmers will be able to operate the aerial vehicle. Making the aerial vehicle water resistant and mounting flexible solar cells on the frame can be done as a future expansion. With increased flight time and cost further reduced, aerial vehicles can provide for an efficient way of pest control and monitoring.

REFERENCES

[1] Jaime Paneque-Gálvez , Michael K. McCall 1, Brian M. Napoletano, Serge A. Wich and Lian Pin Koh, " Small Drones for Community-Based Forest Monitoring: An Assessment of Their Feasibility and Potential in Tropical Areas", 11 February 2014.

[2] Fei, J & Ding H," System Dynamics and Adaptive Control for MEMS Gyroscope Sensor", International Journal of Advanced Robotic Systems, Vol 7, Iss 4, Pp 81-86 viewed 23 March 2014.

[3] KendoulF,"Survey of Advances in Guidance, Navigation, and Control of Unmanned Rotorcraft Systems", Journal of Field Robotics, Vol 29, Iss 2, pp315-378, viewed 1 May 2014.

[4] Scott, J, McLeish, J & Round," Speed Control With Low Armature Loss for Very Small Sensorless Brushed DC Motors", IEEE Transactions on industrial electronics, Vol. 56, No. 4, Pp 1223-1229, viewed 23 March 2014.

[5] Balasubramanian S, Cox, M &Weijen ,"Design & Implementation of a Quadcopter with Visual Control", PhD Thesis, Department of Electrical Engineering, Eindhoven University of Technology, Eindhoven, L 2012.

[6] Gabriel Hugh Elkaim, Fidelis AdhikaPradipta Lie, 'Principles of Guidance, Navigation and Control of UAVs', MN, USA August 6, 2012.

[7] TeppoLuukkonen, 'Modelling and control of quadcopter', school of science, Espoo, August 22, 2011.

[8] Cai, G., Lum, K.-Y., Chen, B. M., and Lee, T. H., "A Brief Overview on Miniature Fixed-Wing Unmanned Aerial Vehicles," in Proc. 8th IEEE International Conf. on Control and Automation, Xiamen, China, pp. 285–290, 2010.

[9] C. C. Haddal and J. Gertler, "Homeland security : Unmanned aerial vehicles and border surveillance," Aviation, pp. 1–6, 2010.

[10] Mark Dupuis, Jonathan Gibbons, Maximillian Hobson-Dupont, Design Optimization of a Quad-Rotor Capable of Autonomous Flight, April 24, 2008.

[11] Andr´asS´obester_, Andy J. Keane, James Scanlan‡, Neil W. Bressloff, Conceptual Design of UAV Airframes Using a Generic Geometry Service, Arlington, Virginia, 26 - 29 September 2005.

[12] S´obester, A. and Keane, A. J., "Classifier Systems Can Reduce Conceptual Design Time," 1st International Conference on Innovation and Integration in Aerospace Sciences, Belfast, 2005.

[13] Hamlyn G. Jones "A advanced Botanical Research" Volume 41, 2004 1499Bryson, M., and Sukkarieh, S., "Vehicle Model-Aided Inertial Navigation for a UAV Using Low-Cost Sensors," in Proc. Australasian Conf. on Robotics and Automation, Canberra, Australia, http://www. araa.asn.au/acra/acra/papers/bryson.pdf (2004).

